ELMO
V.le Certosa 8/B - 27100 Pavia Italy
Tel. ++39 382 529564 - 422372
Fax. ++39 382 527041
E-Mail: info@elmoitaly.com

SUBMERSIBLE MOTORS FOR HYDRAULIC LIFTS

SPECIAL MOTORS SIZE 2

Shaft / hole Ø32 mm. Flange Ø95 mm.

50 Hz
T75XS17-T660N9Y
SPECIAL
1601-22

MOTORI TRIFASI *THREE PHASE MOTORS* DREIPHASEENMOTOREN *MOTEURS TRIPHASES*

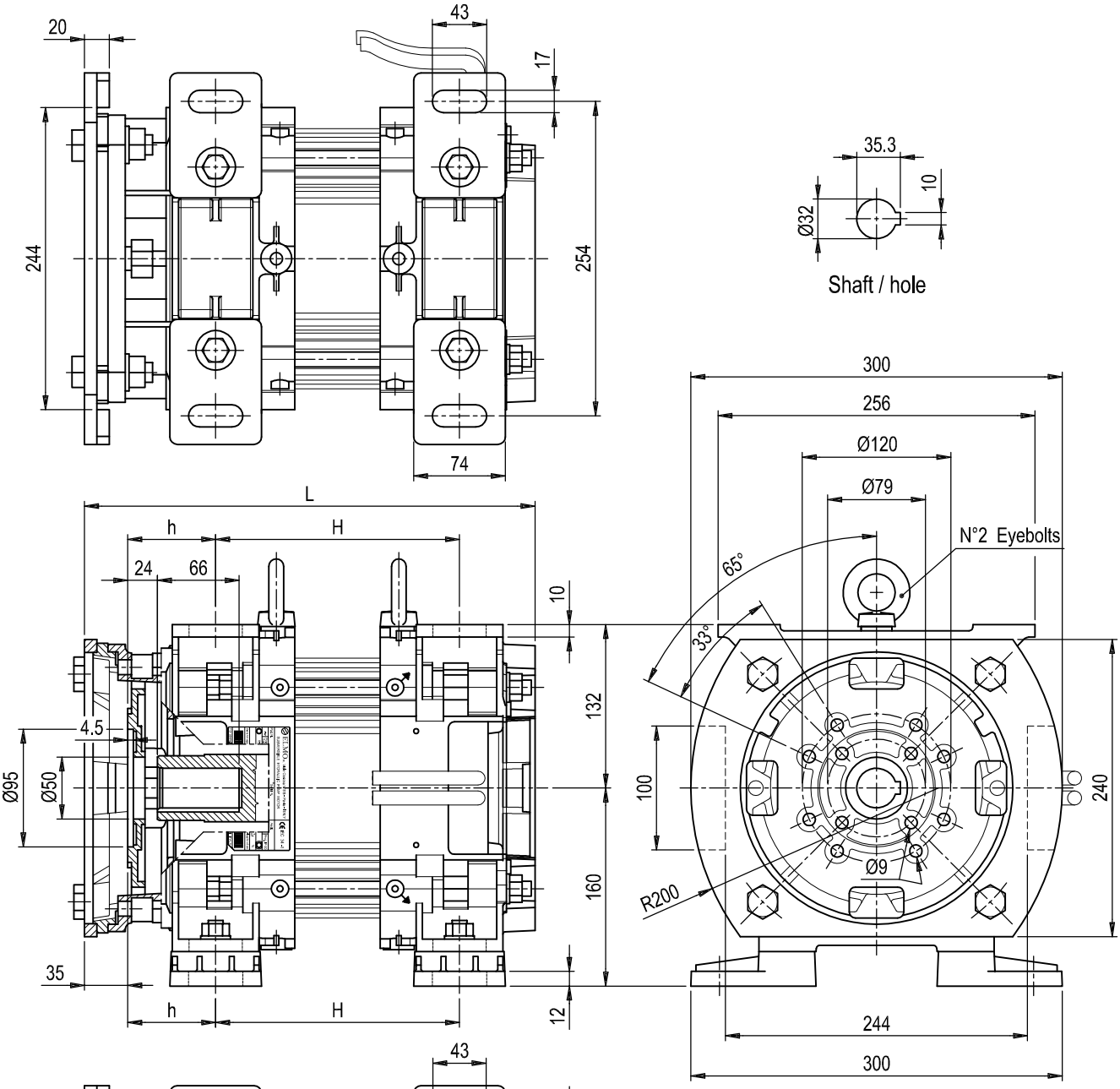

m. 3.00 LUNGH. CAVI ALIMENTAZIONE *LEADS LENGTH*

MOTORS WITHOUT FLYWHEEL

TIPO - *TYPE*	GRANDEZZA - ACCOPPIAM. *SIZE - SUITABLE TO*		POLARITA' - *POLES*	SERIE - *INTERNAL SERIES*	Potenza a 4 Poli 50 Hz Δ 380 V *Nominal Output at 4 Poles 50 Hz Δ 380 V* kW			TRIFASE - *THREE PHASE*	TENSIONE *VOLTAGE* V			50 Hz - *CYCLES AT 50 Hz*	ATTACCHI - *FEET*	TERMINALI - *LEAD TERMINAL*	DIMENSIONI *DIMENSION* L	h	H	Potenza a 2 Poli 50 Hz Δ 380 V *Nominal Output at 2 Poles 50 Hz Δ 380 V* kW
T	7	5	X	S	1	7	-	T	6	6	0	N	9	Y	439	71	272	2 6 -

LA ELMO S.r.l. SI RISERVA IL DIRITTO DI APPORTARE QUALSIASI VARIAZIONE SENZA ALCUN PREAVVISO. *IN ANY MOMENT AND WITHOUT NOTICE ELMO CAN CHANGE MANUFACTURING PROCESS, PERFORMANCE FEATURES.*